Transfer or duplication of this document as well as the utilization or communication of its contents are prohibited unless explicit authorization is granted. Violations will be liable for compensation. All rights reserved for patent, utility model or design registrations. 禁止复制本文件以及使用或披露文件内容，除非获得明确授权。违反者需赔偿损失。本公司保留所有专利、实用新型或外观设计注册的所有权利。

## PCB LAYOUT

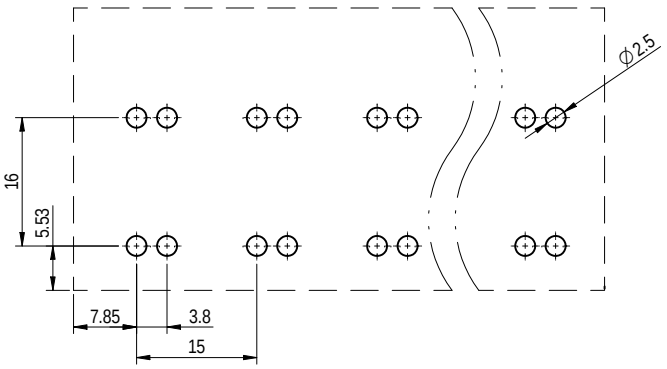


| 未注公差/General tolerances(mm) | | | | | | | | | | | | | | |
|---|---|---|---|---|---|---|---|---|---|---|---|---|---|---|
| 0 ~ 3 | >3 ~ 6 | >6 ~ 10 | >10 ~ 18 | >18 ~ 30 | >30 ~ 50 | >50 ~ 80 | >80 ~ 120 | >120 ~ 180 | >180 ~ 250 | >250 ~ 315 | >315 ~ 400 | >400 ~ 500 | >500 | 0.1/10 |
| ±0.12 | ±0.18 | ±0.22 | ±0.26 | ±0.31 | ±0.37 | ±0.57 | ±0.80 | ±0.93 | ±1.05 | ±1.15 | ±1.60 | ±2.20 | ±2.50 | ±2° |

| UL 标准/UL Standard: | B | C | D |
|---|---|---|---|
| 额定电压/电流/Rated Voltage(V)/Current(A) | 600/101 | 600/101 | 600/5 |
| IEC 标准/IEC Standard: | | | |
| 过压类别/Overvoltage Category/污染等级/Pollution Degree | III/3 | III/2 | II/2 |
| 额定电压/电流/Rated Voltage(V)/Current(A) | 1000/125 | 1000/125 | 1000/125 |
| 额定脉冲电压(KV)/Rate Impulse Voltage(KV) | 8 | 8 | 6 |
| 螺丝扭矩/Torque Tightening(N·m/Lb.in) | / | | |
| 线径范围(硬线和软线)/Wire Range(rigid and flexible)(AWG/mm²) | 14~2 / 1.5~35 | | |
| 间距/Pitch(mm)/线数范围/Poles | 15.0/N=1~6P | | |
| 剥线长度/Stripping length(mm) | 24~25 | | |
| 使用温度范围/Operating temperature(℃) | -40~+105 | | |
| 符合RoHS环保要求/Conform to RoHS | Yes | | |

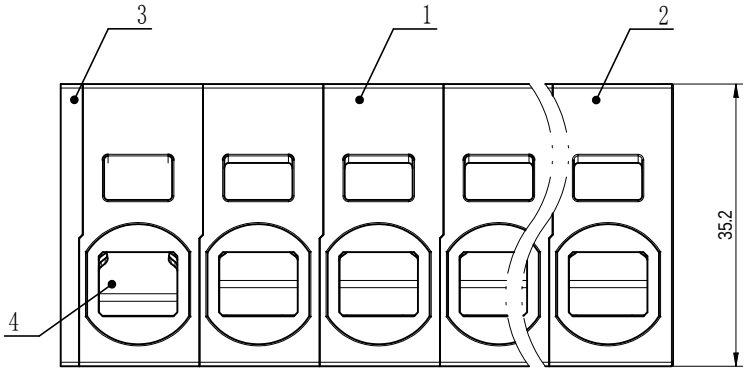


SCALE 1:1

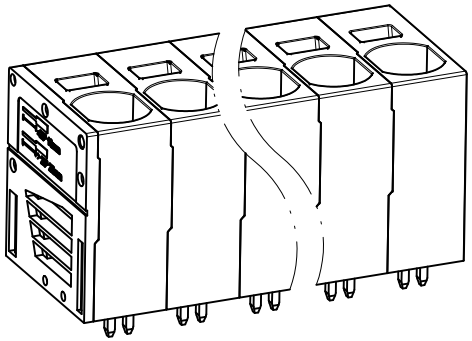

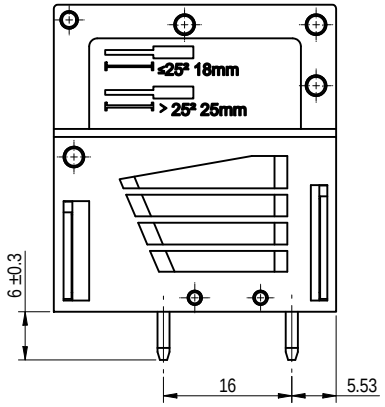


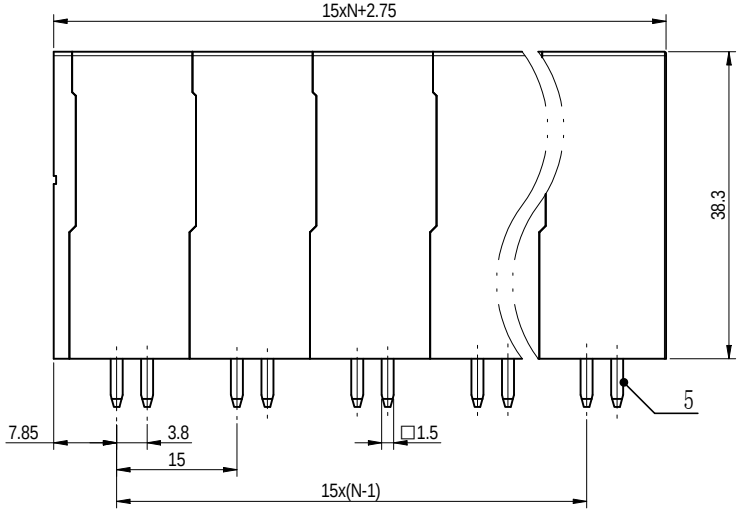


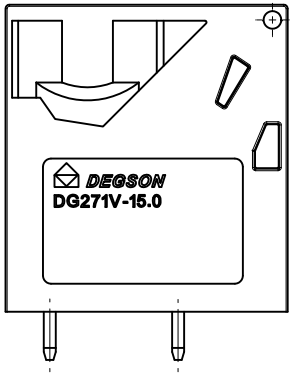


| ITEM | NAME OF PART | MATERIAL | NOTES |
|---|---|---|---|
| 5 | Pin_header | Copper | Sn plated |
| 4 | Spring | Stainless_steel | / |
| 3 | Cover | PA66 | UL94V-0 |
| 2 | Side_housing | PA66 | UL94V-0 |
| 1 | Mid_housing | PA66 | UL94V-0 |

| REV | ECN | DESCRIPTION | DRFT | DATE |
|---|---|---|---|---|
| 00 | | | 已宇辉 | 2022.09.19 |

DEGSON

| | | |
|---|---|---|
| APPD: | 兰春华 | 2022.09.19 |
| CHKD: | 陈招 | 2022.09.19 |
| DRFT: | 已宇辉 | 2022.09.19 |

A3 mm (inch)

MATERIAL: SURFACE/COLOR:
MAT NO./REV: / 00 MAT STATUS: 批量

NAME: DG271V-15.0-XXP-1Y-00A(H)

| DRAWING NO. | TYPE | DRAWING STATUS | SCALE | SHEET |
|---|---|---|---|---|
| 200074682 | CUSTOMER DRAWING | 已发布 | 1.5:1 | 1/1 |