FOR-1754 Rev.1.1

未注公差/General tolerances(mm)														
0 ~ 3	>3 ~ 6	>6 ~ 10	>10 ~ 18	>18 ~ 30	>30 ~ 50	>50 ~ 80	>80 ~ 120	>120 ~ 180	>180 ~ 250	>250 ~ 315	>315 ~ 400	>400 ~ 500	>500	0.1/10
±0.12	±0.18	±0.22	±0.26	±0.31	±0.37	±0.57	±0.80	±0.93	±1.05	±1.15	±1.60	±2.20	±2.50	±2°

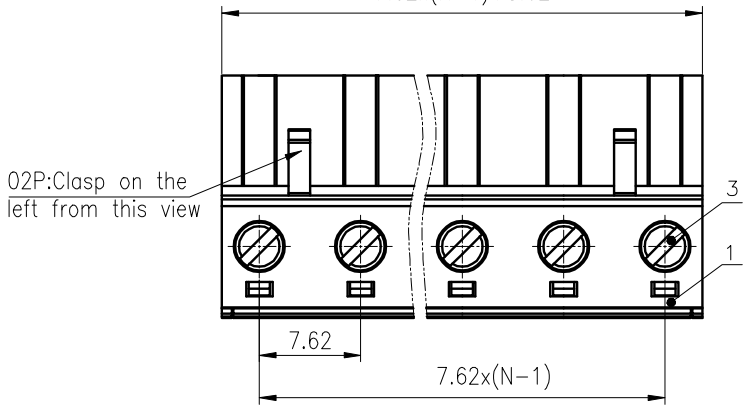

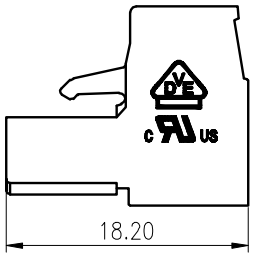

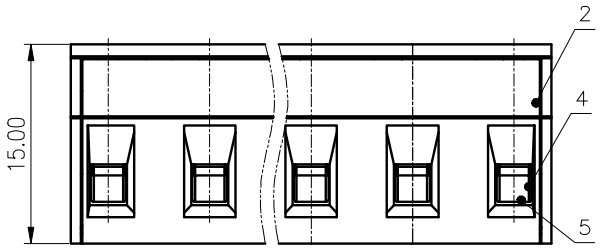

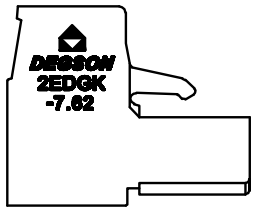

ITEM	NAME OF PART	MATERIAL	NOTES
5	Clamp	Copper alloy	Sn Plated
4	Cage	Copper alloy	M3/Ni Plated
3	Screw	Steel	M3/Zn Plated
2	Cover	PA66	UL94V-0
1	Housing	PA66	UL94V-0

UL 标准/UL Standard:	B	C	D
额定电压/电流/Rated Voltage(V)/Current(A)	300/15	/	300/10
IEC 标准/IEC Standard:			
过压类别/Overvoltage Category/污染等级/Pollution Degree	Ⅲ/2		
额定电压/电流/Rated Voltage(V)/Current(A)	400/20		
额定脉冲电压(KV)/Rate Impulse Voltage(KV)	4.0		
螺丝扭矩/Torque Tightening(N•m/Lb.in)	M3 0.5/4.43		
线径范围(硬线和软线)/Wire Range(rigid and flexible)(mm^2/AWG)	1.0~2.5/28~12		
间距/Pitch(mm)/线数范围/Poles	7.62/N=02~16P		
剥线长度/Stripping length(mm)	7-8		
使用温度范围/Operating temperature(°C)	-40~+105		
符合RoHS环保要求/Conform to RoHS	Yes		
标准颜色编号/Standard color number: PANTONE / RAL	/		

MATERIAL:	SURFACE:
MAT NO.: /	DEGSON® 宁波高松电子有限公司 NINGBO DEGSON ELECTRICAL CO., LTD
STATUS: /	
APPD: Lan ChH2020.03.24	NAME: 2EDGK-7.62-XXP-1Y-1000A(H)
CHKD: Gong YZ2020.03.24	
DRFT: Fan JY 2020/03/24	DRAWING NO.: 10001601 REV TO
SIZE: A4 mm (inch)	TYPE: CUSTOMER DRAWING SCALE: 2:1 SHEET 1/1

REV	ECN	DESCRIPTION	DRFT	DATE