FOR-1754 Rev.1.1

未注公差/General tolerances(mm)														
0 ~ 3	>3 ~ 6	>6 ~ 10	>10 ~ 18	>18 ~ 30	>30 ~ 50	>50 ~ 80	>80 ~ 120	>120 ~ 180	>180 ~ 250	>250 ~ 315	>315 ~ 400	>400 ~ 500	>500	0.1/10
±0.12	±0.18	±0.22	±0.26	±0.31	±0.37	±0.57	±0.80	±0.93	±1.05	±1.15	±1.60	±2.20	±2.50	±2°

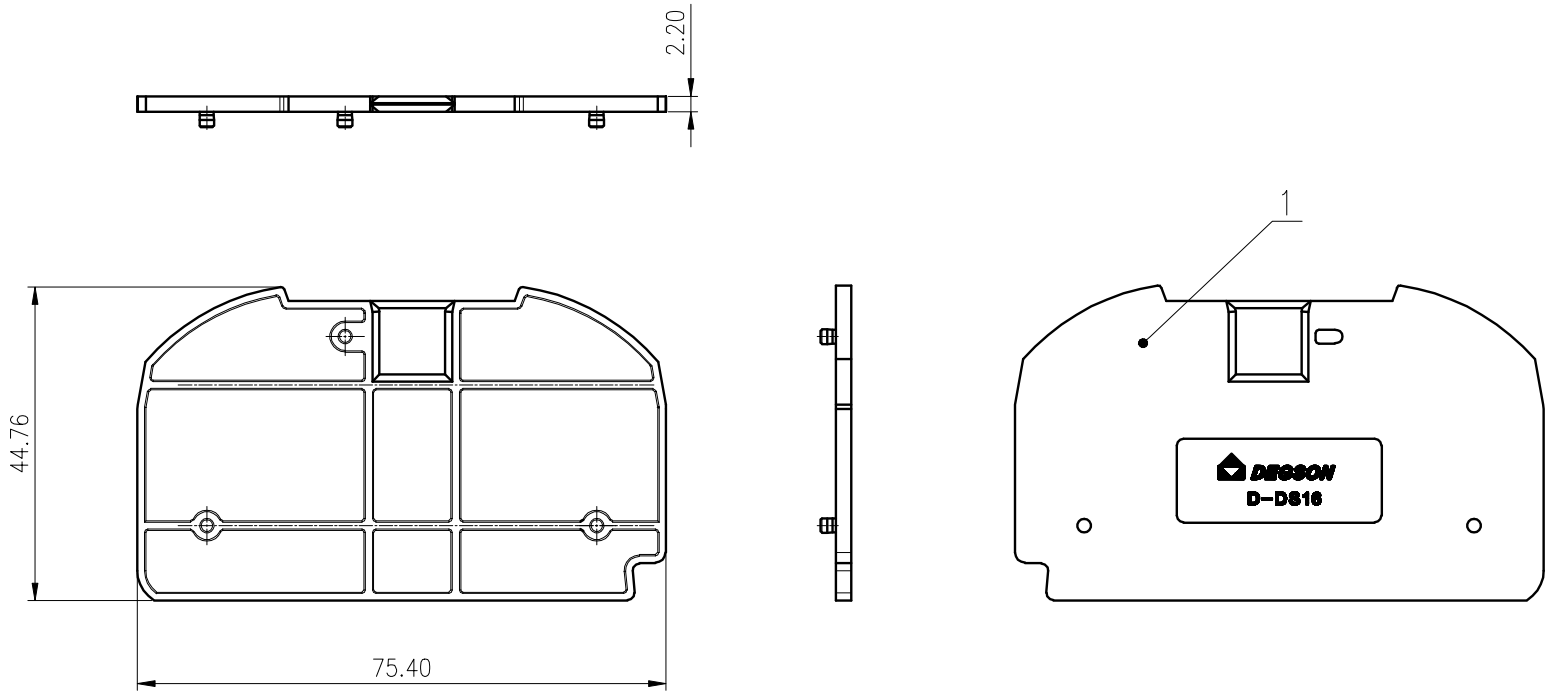

ITEM	NAME OF PART	MATERIAL	NOTES
1	Cover	PA66	UL94V-0

使用温度范围/Operating temperature(℃)	-40~+105
符合RoHS环保要求/Conform to RoHS	Yes
标准颜色编号/Standard color number: PANTONE / RAL	/

MATERIAL: /	SURFACE: /
MAT NO.: /	DEGSON® 宁波高松电子有限公司 NINGBO DEGSON ELECTRICAL CO., LTD
STATUS: /	
APPD: Li GL 2020.06.01	NAME: D-DS16-01P-1Y-00A(H)
CHKD: Mao J 2020.06.01	
DRFT: Wang LX 2020.06.01	DRAWING NO.: D-DS16-C01 REV T0-1
SIZE: A4 mm (inch)	TYPE: CUSTOMER DRAWING SCALE: 1:1 SHEET 1/1

REV	ECN	DESCRIPTION	DRFT	DATE