FOR-1754 Rev.1.1

未注公差/General tolerances(mm)														
0 ~ 3	>3 ~ 6	>6 ~ 10	>10 ~ 18	>18 ~ 30	>30 ~ 50	>50 ~ 80	>80 ~ 120	>120 ~ 180	>180 ~ 250	>250 ~ 315	>315 ~ 400	>400 ~ 500	>500	0.1/10
±0.12	±0.18	±0.22	±0.26	±0.31	±0.37	±0.57	±0.80	±0.93	±1.05	±1.15	±1.60	±2.20	±2.50	±2°

PCB LAYOUT

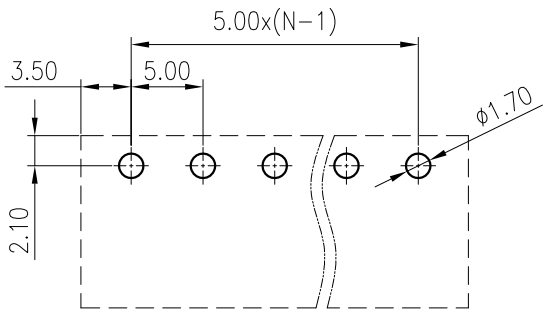

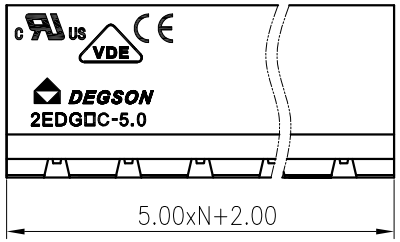

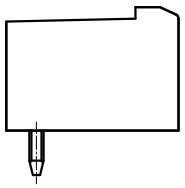

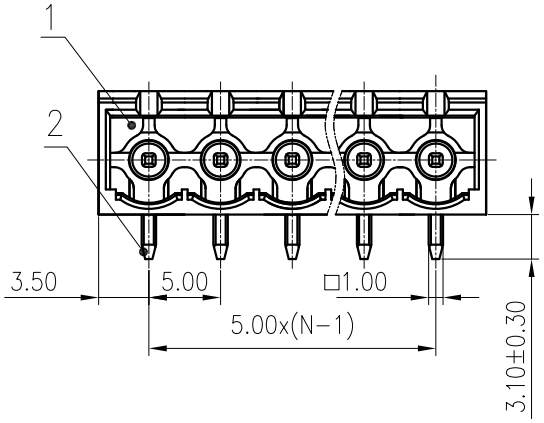

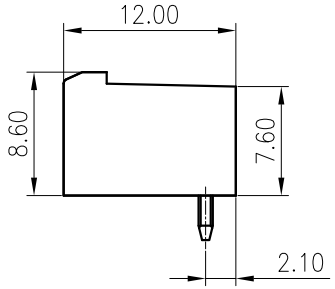

ITEM	NAME OF PART	MATERIAL	NOTES
2	Pin	Copper	Sn Plated
1	Housing	PA66	UL94V-0

UL 标准/UL Standard:	B	C	D
额定电压/电流/Rated Voltage(V)/Current(A)	300/15	/	300/10

IEC 标准/IEC Standard:	
过压类别/Overvoltage Category/污染等级/Pollution Degree	III/2
额定电压/电流/Rated Voltage(V)/Current(A)	320/20
额定脉冲电压(KV)/Rate Impulse Voltage(KV)	4
间距/Pitch(mm)/线数范围/Poles	5.0/N=02P~24P
使用温度范围/Operating temperature(°C)	-40~+105
符合RoHS环保要求/Conform to RoHS	Yes

REV	ECN	DESCRIPTION	DRFT	DATE

MATERIAL: /
SURFACE: /
MAT NO.: /
STATUS: /
APPD: LanChH 2020.03.24
CHKD: GongYZh 2020.03.24
DRFT: Fan JY 2020.03.24

DEGSON®
宁波高松电子有限公司
NINGBO DEGSON ELECTRICAL CO., LTD

NAME: 2EDGRC-5.0-XXP-1Y-100A(H)

DRAWING NO.: 10001605
REV: T0
SIZE: A4
mm (inch)
TYPE: CUSTOMER DRAWING
SCALE: 2:1
SHEET: 1/1